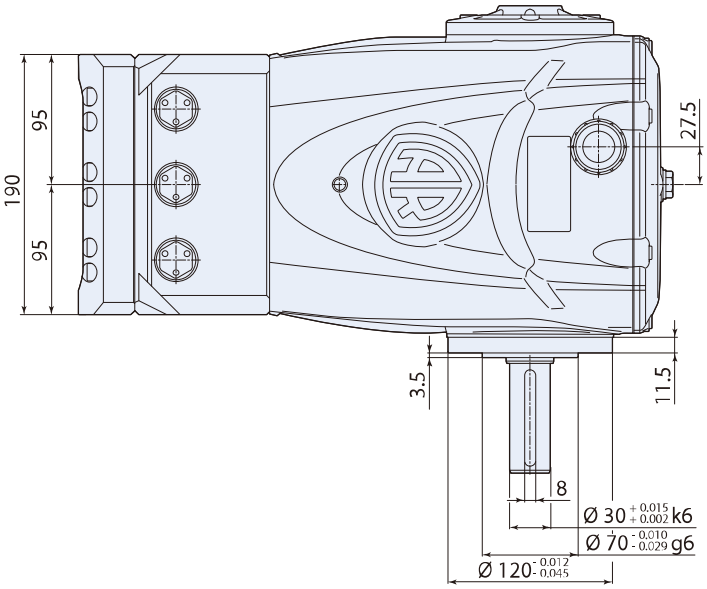
190
95
95
27.5
3.5
11.5
8
Ø 30 +0.015 +0.002 k6
Ø 70 -0.010 -0.029 g6
Ø 120 -0.012 -0.045

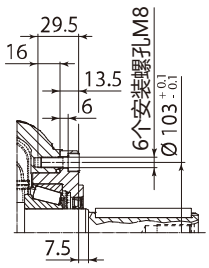
29.5
16
13.5
6
6个安装螺孔M8
Ø 103 +0.1 -0.1
7.5

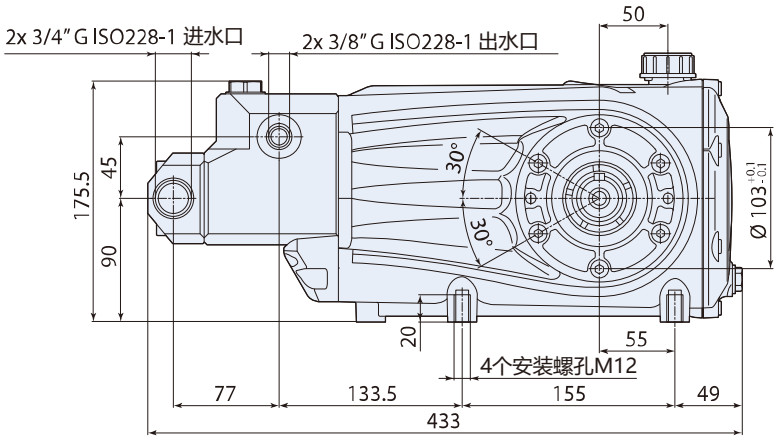
2x 3/4" G ISO228-1 进水口
2x 3/8" G ISO228-1 出水口
50
175.5
45
90
30°
30°
Ø 103 +0.1 -0.1
20
55
4个安装螺孔M12
77
133.5
155
49
433

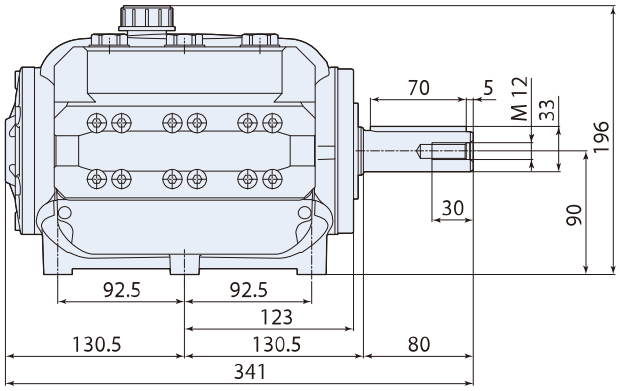
70
5
M 12
33
196
30
90
92.5
92.5
123
130.5
130.5
80
341